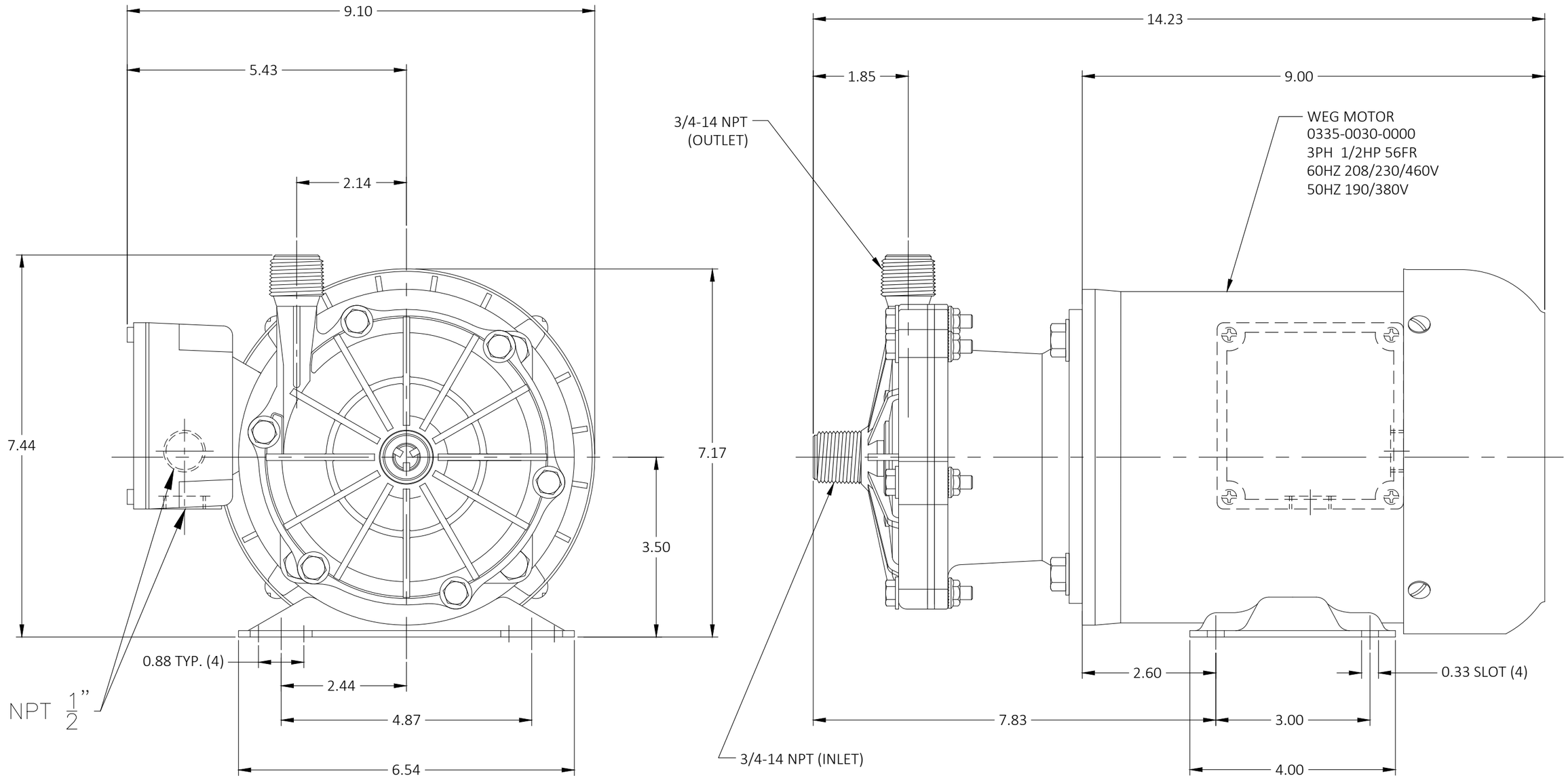

PUMP ASSEMBLY WEIGHT: 37.4 LBS.

DRAWING SIZE: D-22x34	MARCH MFG. INC.	1819 PICKWICK AVE. GLENVIEW, ILLINOIS	
UNLESS NOTED OTHERWISE ALL DIMS ARE IN INCHES.		DRAWN CA 04/30/24	MOLD # ----
DIMS. TOLERANCE		CHECKED HZ 04/30/24	FIXTURE # ----
X.XX ±0.03		CUSTOMER ----	
X.XXX ±0.005		MATERIAL ----	
ANGLES ±1°			

THIS DOCUMENT DISCLOSED SUBJECT MATTER IN WHICH MARCH MFG. INC. HAS PROPRIETARY RIGHTS, NEITHER RECEIPT NOR POSSESSION THEREOF CONFERS OR TRANSFERS ANY RIGHT TO REPRODUCE OR DISCLOSE THE DOCUMENT, ANY PART THEREOF, ANY INFORMATION CONTAINED THEREIN, OR ANY PHYSICAL ARTICLE OR DEVICE OR TO PRACTICE ANY METHOD OR PROCESS, EXCEPT BY WRITTEN PERMISSION FROM OR WRITTEN AGREEMENT WITH MARCH MFG. INC.

REV.	INITIALS	DATE	CHANGE

PART NAME Dimensional Assy 335-K-MD 3Ph 1/2HP

PART # 0335-0048-0100 d1

REV. ----