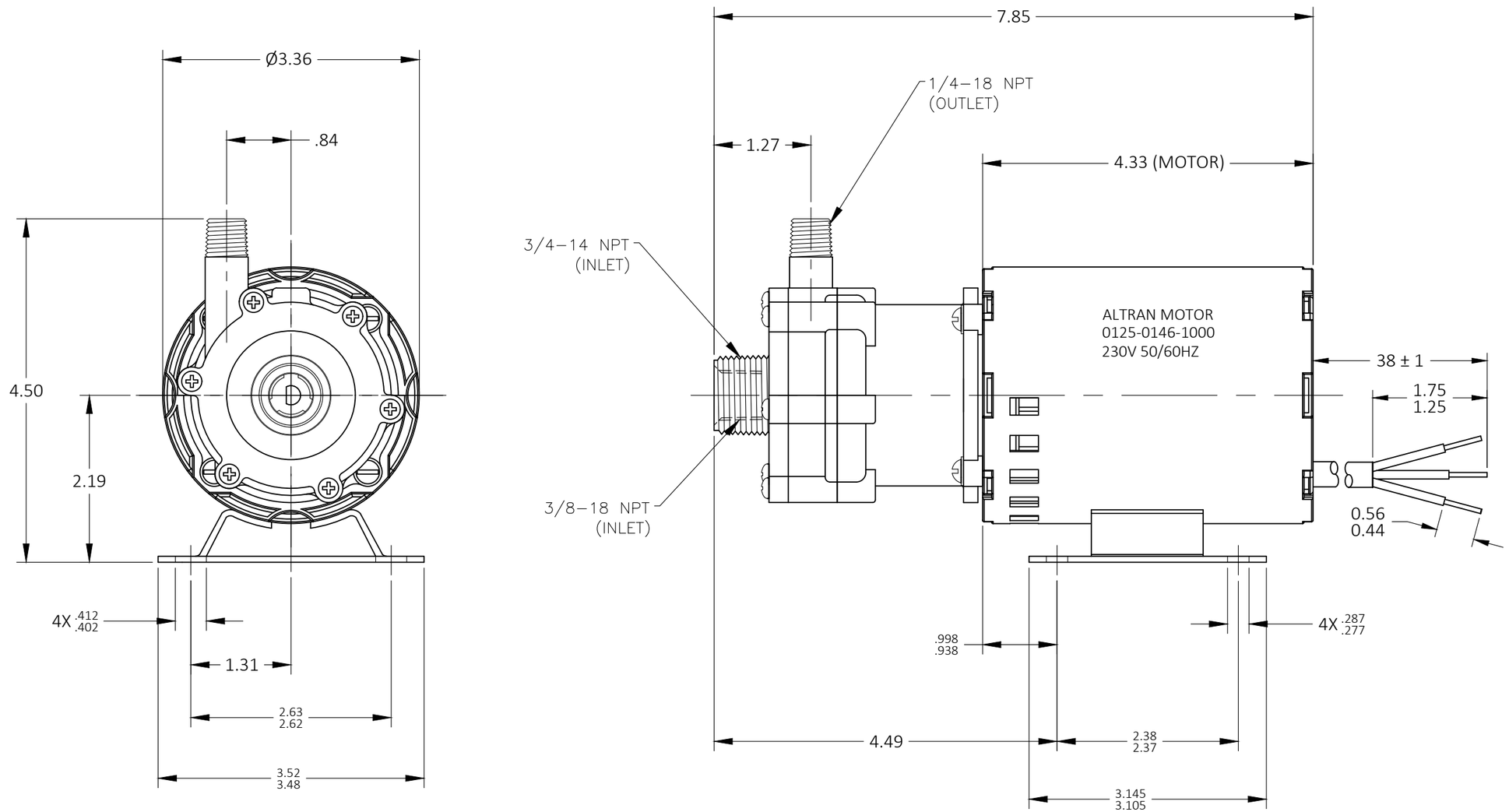

DRAWING SIZE: C-17x22

UNLESS NOTED OTHERWISE ALL DIMS ARE IN INCHES.

DIMS.	TOLERANCE
X.XX	±0.03
X.XXX	±0.005
ANGLES	±1°

MARCH MFG. INC. 1819 PICKWICK AVE. GLENVIEW, ILLINOIS

THIS DOCUMENT DISCLOSED SUBJECT MATTER IN WHICH MARCH MFG. INC. HAS PROPRIETARY RIGHTS, NEITHER RECEIPT NOR POSSESSION THEREOF CONFERS OR TRANSFERS ANY RIGHT TO REPRODUCE OR DISCLOSE THE DOCUMENT, ANY PART THEREOF, ANY INFORMATION CONTAINED THEREIN, OR ANY PHYSICAL ARTICLE OR DEVICE OR TO PRACTICE ANY METHOD OR PROCESS, EXCEPT BY WRITTEN PERMISSION FROM OR WRITTEN AGREEMENT WITH MARCH MFG. INC.

DRAWN CA	04/08/26	MOLD # ----	
CHECKED HZ	04/08/26	FIXTURE # ----	
CUSTOMER ----			
MATERIAL ----			

REV.	INITIALS	DATE	CHANGE

PART NAME Dimensional Assy BC-2CP-MD 230V 50/60HZ (Altran Motor)

PART # 0125-0154-0200 d1

REV. ----