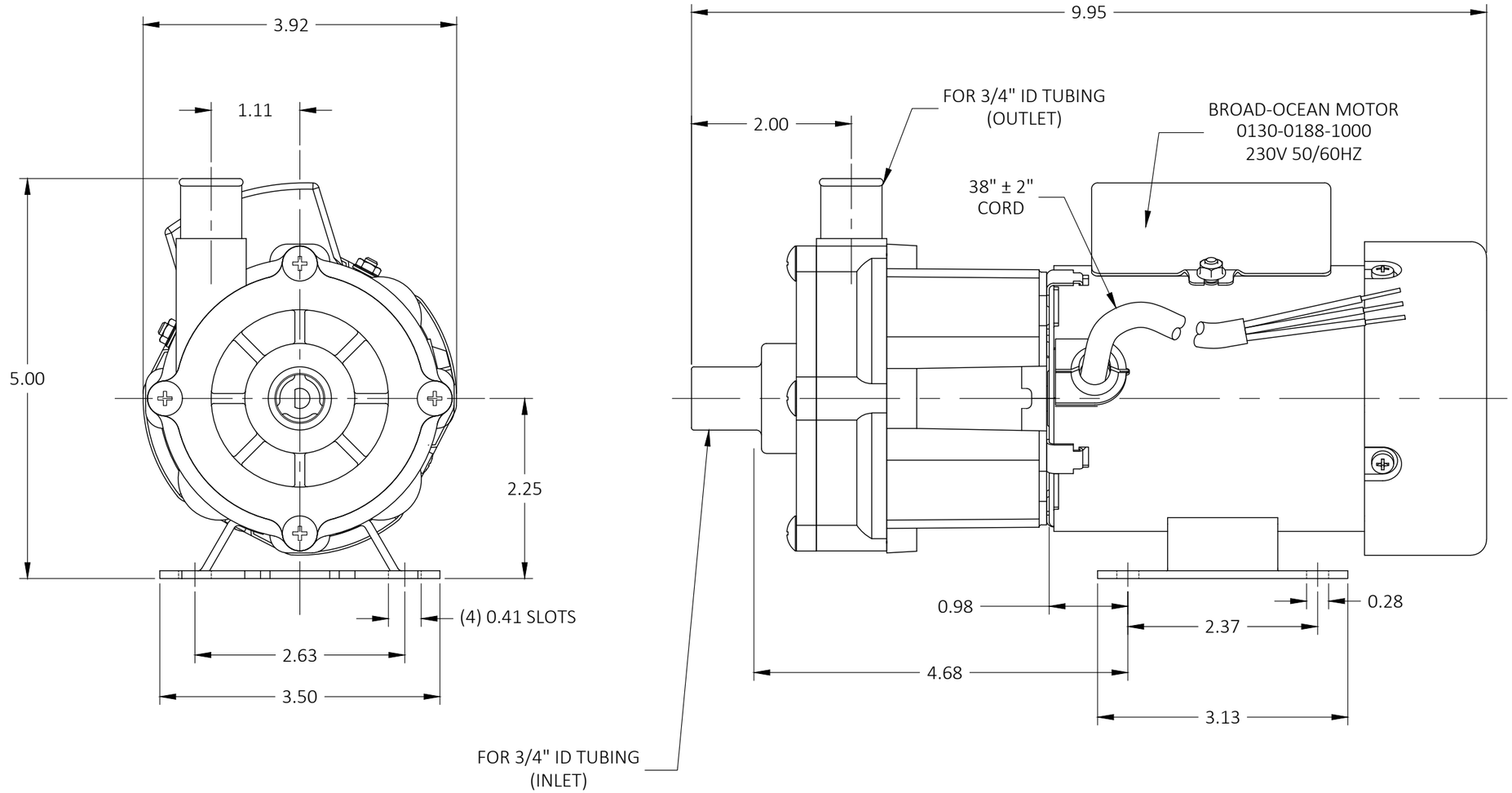

DRAWING SIZE: C-17x22	MARCH MFG. INC.	1819 PICKWICK AVE. GLENVIEW, ILLINOIS	
UNLESS NOTED OTHERWISE ALL DIMS ARE IN INCHES.	THIS DOCUMENT DISCLOSED SUBJECT MATTER IN WHICH MARCH MFG. INC. HAS PROPRIETARY RIGHTS, NEITHER RECEIPT NOR POSSESSION THEREOF CONFERS OR TRANSFERS ANY RIGHT TO REPRODUCE OR DISCLOSE THE DOCUMENT, ANY PART THEREOF, ANY INFORMATION CONTAINED THEREIN, OR ANY PHYSICAL ARTICLE OR DEVICE OR TO PRACTICE ANY METHOD OR PROCESS, EXCEPT BY WRITTEN PERMISSION FROM OR WRITTEN AGREEMENT WITH MARCH MFG. INC.	DRAWN CA 08/01/25	MOLD # ----
DIMS. TOLERANCE		CHECKED HZ 08/01/25	FIXTURE # ----
X.XX ±0.03		CUSTOMER ----	
X.XXX ±0.005		MATERIAL ----	REV. / INITIALS / DATE / CHANGE
ANGLES ±1°	PART NAME Dimensional Assy AC-3AP-MD 230V 50/60HZ (Broad-Ocean)	PART # 0130-0197-0100 d1	REV. ----