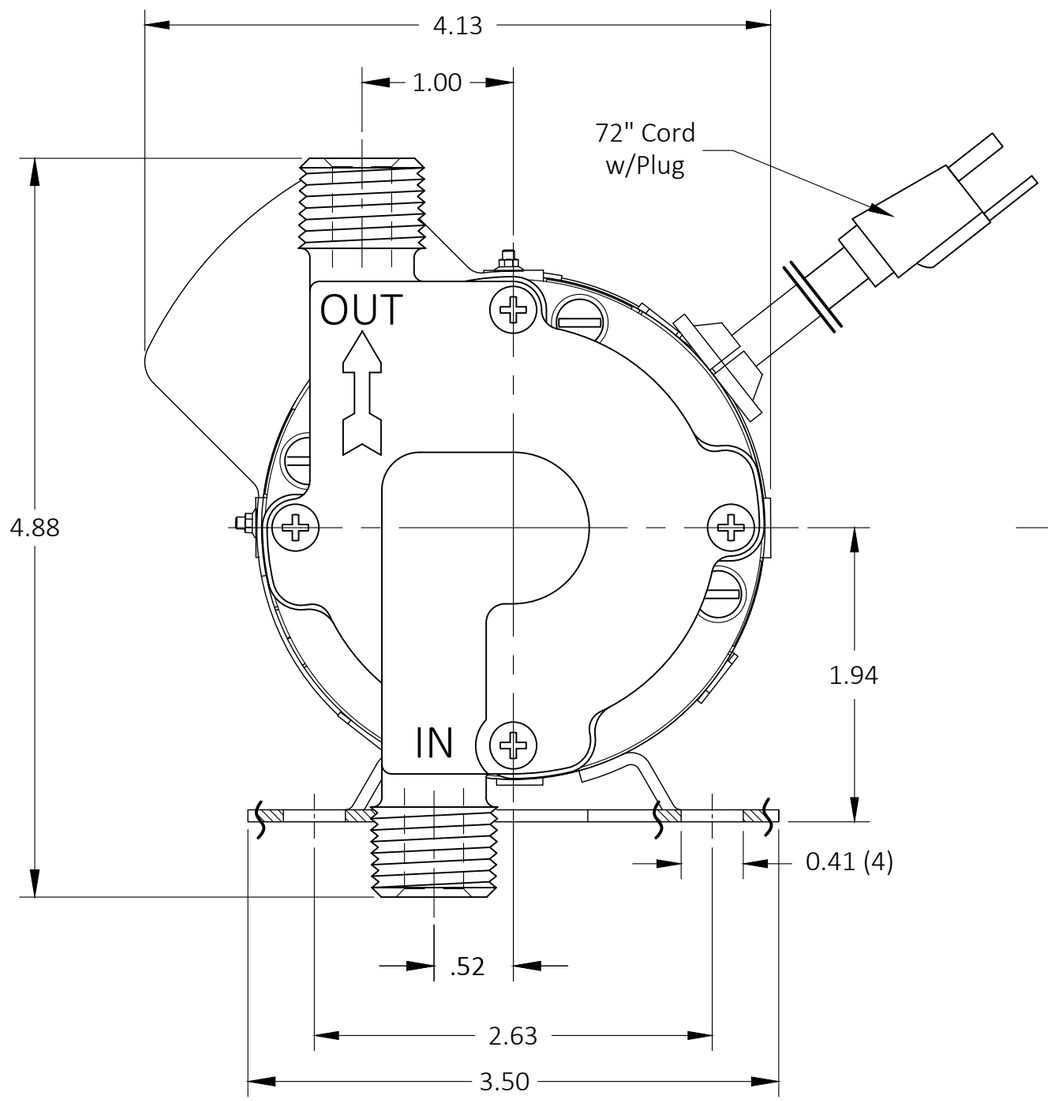


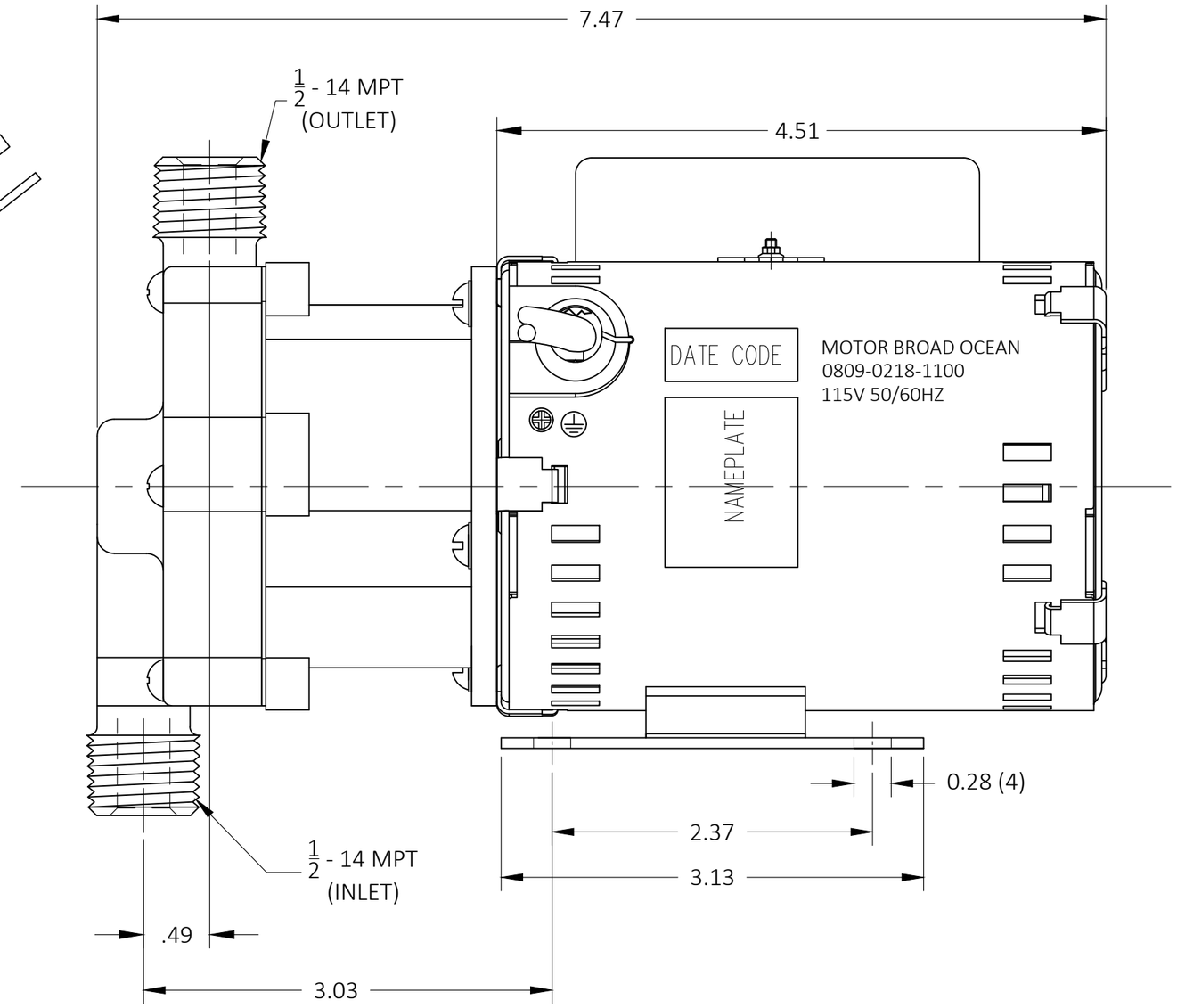


| | | | |
|---|---|---|---|
| DRAWING SIZE: B-11x17 | MARCH MFG. INC. | 1819 PICKWICK AVE. GLENVIEW, ILLINOIS | |
| UNLESS NOTED OTHERWISE ALL DIMS ARE IN INCHES. | THIS DOCUMENT DISCLOSED SUBJECT MATTER IN WHICH MARCH MFG. INC. HAS PROPRIETARY RIGHTS, NEITHER RECEIPT NOR POSSESSION THEREOF CONFERS OR TRANSFERS ANY RIGHT TO REPRODUCE OR DISCLOSE THE DOCUMENT, ANY PART THEREOF, ANY INFORMATION CONTAINED THEREIN, OR ANY PHYSICAL ARTICLE OR DEVICE OR TO PRACTICE ANY METHOD OR PROCESS, EXCEPT BY WRITTEN PERMISSION FROM OR WRITTEN AGREEMENT WITH MARCH MFG. INC. | DRAWN CA 12/02/25 | MOLD # ---- |
| DIMS. TOLERANCE | | CHECKED HZ 12/02/25 | FIXTURE # ---- |
| X.XX ±0.03 | | CUSTOMER ---- | |
| X.XXX ±0.005 | | MATERIAL ---- | |
| ANGLES ±1° | PART NAME Dimensional Assy 809-BR-HS 115V w/Base 72"Cord w/Plug B.O. | PART # 0809-0262-0100 d1 | REV. ---- |

| REV. | INITIALS | DATE | CHANGE |
|---|---|---|---|