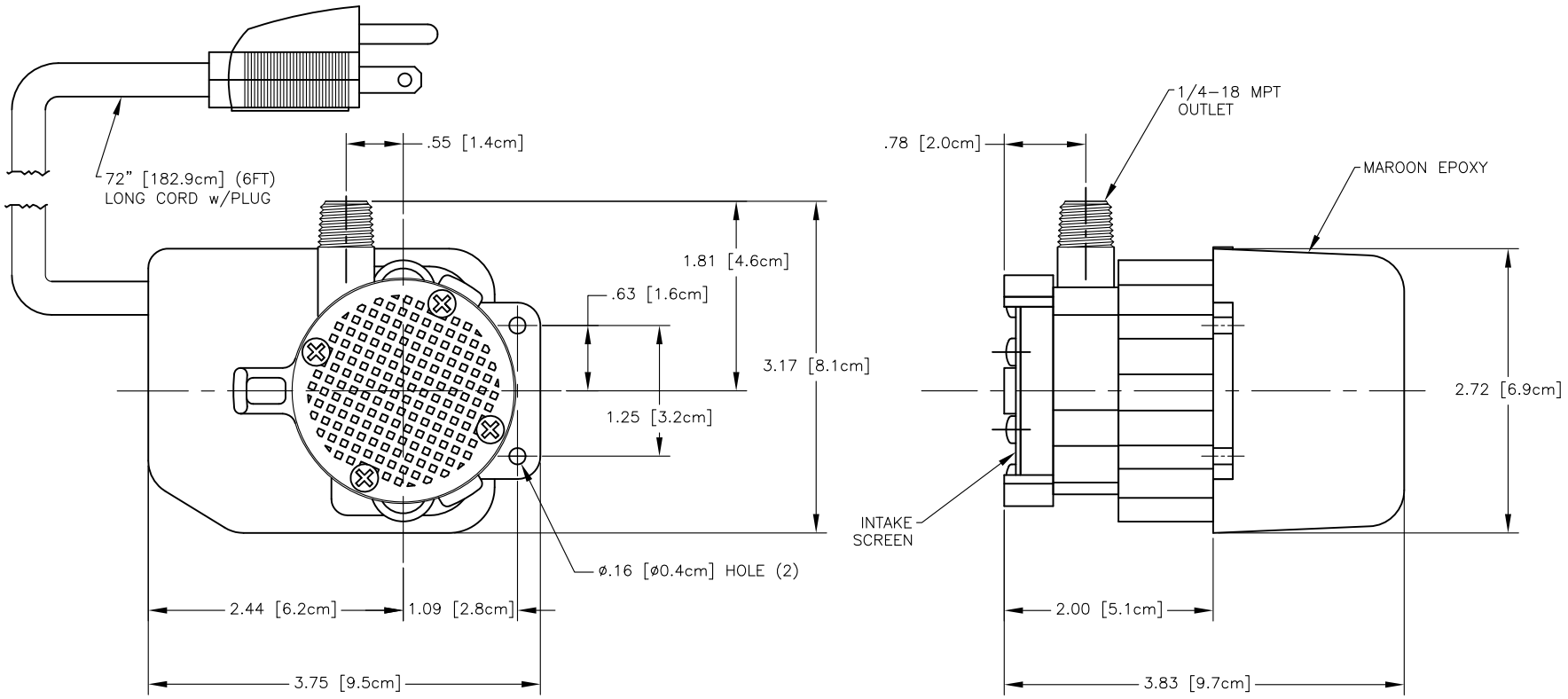

UNLESS NOTED OTHERWISE ALL DIMS. ARE IN INCHES.

DIMS.	TOL.
0.000	±0.005
0.00	±0.03
FRACTIONS	±1/64
ANGLES	±1°

MARCH MFG. INC.

1819 PICKWICK AVE. GLENVIEW, ILLINOIS

DRAWN BY JERRY	CHKD BY HANS	FINISH	DRWG SIZE B-11x17
DATE 09/27/06	DATE 09/27/06	MOLD NO. / TOOL NO.	FIXTURE NO.

REV.	INITIALS	DATE	E.C.O.	CHANGE
D	TCZ MA	1/25/10		Metric Dimensions Added.
C	JBT	09/27/06		Redrawn in autocad.

THIS DOCUMENT DISCLOSED SUBJECT MATTER IN WHICH MARCH MFG. INC. HAS PROPRIETARY RIGHTS, NEITHER RECEIPT NOR POSSESSION THEREOF CONFERS OR TRANSFERS ANY RIGHT TO REPRODUCE OR DISCLOSE THE DOCUMENT, ANY PART THEREOF, ANY INFORMATION CONTAINED THEREIN, OR ANY PHYSICAL ARTICLE OR DEVICE OR TO PRACTICE ANY METHOD OR PROCESS, EXCEPT BY WRITTEN PERMISSION FROM OR WRITTEN AGREEMENT WITH MARCH MFG. INC.

CUSTOMER

MATERIAL

PART NAME Dimensional Assy 1U-MD 115V 50/60HZ

PART NO. 0115-0007-0400 d1 REV. D